STINGER PELEROSIS

TEAM PROJECT REPORT

Submitted by

2023118008 JAYA SREE YADHAV B
2023118012 AJAY R KRISHNA
2023118013 SHYAM S

in partial fulfilment for the professional core course
ME 23404: Product Design and Development

DEPARTMENT OF MECHANICAL ENGINEERING
COLLEGE OF ENGINEERING GUINDY
ANNA UNIVERSITY, CHENNAI

APRIL 2025

ANNA UNIVERSITY, CHENNAI - 600 025

BONAFIDE CERTIFICATE

Certified that this Project Report titled "**STINGER PELEROSIS**" is the bona fide work of the following students in a team:

2023118008	**JAYA SREE YADHAV B**
2023118012	**AJAY R KRISHNA**
2023118013	**SHYAM S**

Certified further that to the best of our knowledge the work reported herein does not form part of any other thesis or dissertation on the basis of which a degree or award was conferred on an earlier occasion on this or any other candidate.

2023118008	**2023118012**	**2023118013**
JAYA SREE YADHAV B	**AJAY R KRISHNA**	**SHYAM S**

PROJECT SUMMARY

Title of the Project Work:	**STINGER PELEROSIS**
Students' Reg. No. & Name :	**2023118008 JAYA SREE YADHAV B** **2023118012 AJAY R KRISHNA** **2023118013 SHYAM S**
Course Code, Title &Course Instructor:	**ME23404 Product Design & Development** **Dr.N . MUTHU MEKALA** Dept. of Mechanical Engineering, College of Engineering Guindy Anna University, Chennai – 600 025

The project focuses on enhancing the efficiency and precision of TIG (Tungsten Inert Gas) welding by developing a novel filler rod holder equipped with an integrated kinematic mechanism. Traditional TIG welding techniques often require welders to manually feed the filler rod using one hand, which can lead to operator fatigue and inconsistencies in the welding process. This manual feeding method not only affects the quality of the weld but also increases the physical strain on the welder, potentially impacting productivity over time.

To address these challenges, the proposed design aims to automate and control the filler rod feeding process. By integrating a kinematic mechanism into the filler rod holder, this innovation seeks to provide a more ergonomic solution that allows for smoother and more consistent delivery of filler material during welding operations. The expected outcomes include reduced operator fatigue, improved weld quality, and enhanced overall efficiency in high-precision industries such as aerospace and automotive fabrication.

In summary, this project aims to design an innovative filler rod holder with an integrated kinematic mechanism to improve controlled filler rod feeding in TIG welding, thereby enhancing efficiency and precision while reducing operator fatigue.

TABLE OF CONTENTS

CHAPTER NO.	TITLE	PAGE NO.
	PROJECT SUMMARY	iii
	LIST OF FIGURES	vii
	LIST OF TABLES	viii
1.	**Introduction**	
	1.1 Introduction to Filler Rod Holder	1
	1.2 Objective of Filler Rod Holder	1
	1.3 Mission Statement	1
	1.4 Methodology (PDD Front End Process)	3
	1.5 Gant Chart for Project Timeline (Milestone)	5
2.	**Customer Need Analysis (CNA) & Specification Design**	
	2.1 Introduction to CNA	6
	2.2 Introduction to Product Specification Design	7
	2.2.1 Prepare the list of metrics.	8
	2.2.2 Collect competitive benchmarking information.	10
	2.2.3 Set ideal and marginally acceptable target values (Target Spec.)	10

3. Concept Generation & Concept Selection

3.1 Introduction to Concept Generation 13

3.1.1 Concept Classification Tree 14

3.1.2 Concept Screening 16

4. Product Architecture & Industrial Design

4.1 Introduction to Product Architecture 19

4.1.1. Cluster of Elements 19

4.1.2 A Rough Geometric Layout. 19

4.2 Introduction to Industrial Design 21

5. Final Product Specifications & Prototyping

5.1 Introduction to Final Product 22

5.1.1 Develop a cost model of the product. 22

5.1.2 Refine the specifications (Trade-offs) 23

5.2 Introduction to Prototyping (Analytical and or Physical) 24

5.2.1 Prototype (3D Solid Works) and or Prototype (Physical) 25

6. Conclusion 29

References 31

LIST OF FIGURES

FIGURE NO	TITLE	PAGE NO
FIG 1.1	TIG WELDING	2
FIG 1.2	WELDING IN SHEET METAL	2
FIG 1.3	FRONT END PROCESS	4
FIG 3.1	CONCPET CLASSIFICATION TREE	14
FIG 4.1	ROUGH SKETCH	20
FIG 5.1	SPRING	25
FIG 5.2	SPRING ASSEMBLY	25
FIG 5.3	TORCH ATTACHMENT	26
FIG 5.4	ROD HOLDER	26
FIG 5.5	FILLER ROD HOLDER	27

LIST OF TABLES

TABLE NO	TITLE	PAGE NO
TABLE 1.1	FRONT END PROCESS	3
TABLE 1.2	GANT CHART	5
TABLE 2.1	CUSTOMER NEED AND BENEFIT TABLE	6
TABLE 2.2	PRODUCT SPECIFICATIONS	7
TABLE 2.3	LIST OF METRICES	8
TABLE 2.4	BENCHMARKING INFORMATION	10
TABLE 2.5	IDEAL AND MARGINALLY ACCEPTABLE TARGET VALUE	11
TABLE 3.1	CONCEPT GENERATION TABLE	15
TABLE 3.2	CONCEPT SCREENING	17
TABLE 5.1	COST MODEL TABLE	22
TABLE 5.2	SPECIFICATION TRADE-OFF TABLE	23

CHAPTER 1

INTRODUCTION:

1.1 Introduction to Filler Rod Holder:

TIG (Tungsten Inert Gas) welding is widely used in industries requiring high-precision welding, such as aerospace, automotive, and fabrication However, traditional filler rod feeding requires the welder to use one hand manually, leading to operator fatigue and inconsistency.

This project aims to design a filler rod holder with an integrated spring feed mechanism to assist in controlled filler rod feeding,improving efficiency and precision.

1.2 Objective of Filler Rod Holder:

The objective of this project is to design and develop a filler rod holder with a simple kinematic mechanism that integrates with a TIG welding torch, ensuring:

- Controlled Incremental Feeding
- Ergonomic Operation
- Compact and Heat-Resistant Design
- Increased Welding Efficiency and Quality

1.3 Mission statement:

Currently, welders face several challenges when manually feeding the filler rod during TIG welding, including:

Inconsistent Filler Rod Feeding: Variations in hand movement affect weld bead quality.

Operator Fatigue: Continuous manual feeding strains the welder's hand, reducing productivity.

Precision Issues: Unsteady hand movement can cause defects in the weld.

Lack of an Ergonomic Mechanism: No integrated support system exists for assisting filler rod feeding.

FIGURE 1.1 TIG WELDING

FIGURE 1.2 WELDING IN SHEET METAL

1.4 Methodology (Front end process):

TABLE 1.1: FRONT END PROCESS

Stage	Description
Identifying Customer Needs	Conduct market research, surveys, and interviews to understand user requirements and pain points.
Establishing Target Specifications	Define measurable product criteria such as performance, durability, and cost.
Concept Generation	Develop multiple design ideas, considering usability, efficiency, and environmental sustainability.
Concept Selection	Use methods like the Pugh Matrix to compare and select the best concept.
Concept Testing	Create prototypes and test them with potential users for feedback on functionality and efficiency.
Setting Final Specifications	Refine design based on test results, optimizing material selection and ergonomic factors.
Project Planning	Outline development timeline, budgeting, resource allocation, and production strategy.
Economic Analysis	Evaluate cost-effectiveness, pricing strategy, and financial feasibility of the product.

Benchmarking Competitive Products	Compare features and performance with existing market solutions to enhance competitiveness.
Modelling & Prototyping	Develop detailed 3D models and functional prototypes for final validation before mass production.

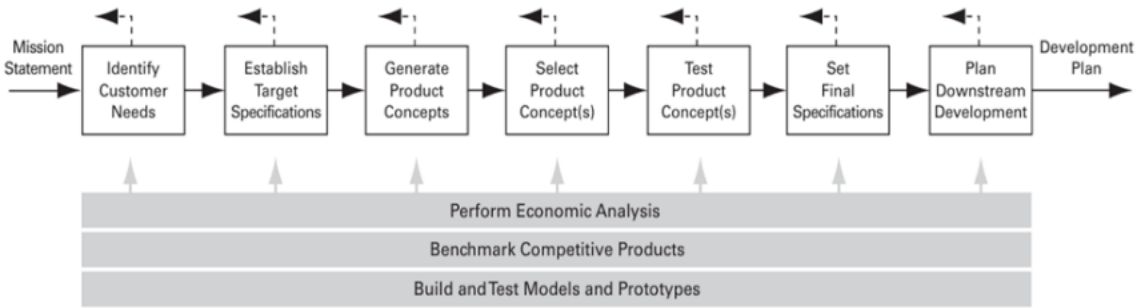

FIG 1.3: FRONT END PROCESS

1.5 Gant Chart for Project Timeline (Milestone)

TABLE 1.2: GANT CHART

Task / Milestone	Week 1	Week 2	Week 3	Week 4	Week 5	Week 6	Week 7	Week 8	Week 9	Week 10
Identifying Customer Needs	*	*								
Establishing Target Specifications		*	*							
Concept Generation				*	*	*				
Concept Selection							*	*		
Modelling & Prototyping									*	*

CHAPTER – 2

CUSTOMER NEED ANALYSIS (CNA) AND DESIGN SPECIFICATIONS

2.1 Introduction to Customer Need Analysis (CNA)

Customer Need Analysis (CNA) is a crucial first step in developing any product, ensuring that the final solution addresses real user requirements and industry expectations. For a filler rod holder, this process involves understanding the specific needs of welders and fabricators regarding the safe, organized, and efficient storage of welding filler rods.

The primary objective of the filler rod holder is to provide a practical solution for storing and organizing various types and sizes of welding filler rods, which are essential consumables in welding processes like TIG and stick welding. Proper storage helps maintain the quality of the rods, prevents contamination, and enhances workflow efficiency in workshops.

TABLE 2.1: CUSTOMER NEEDS AND BENEIFITS TABLE

Customer Type	Description	Needs & Pain Points	Potential Benefits
Professional Welders	Skilled welders working in fabrication, aerospace, automotive, and industrial sectors.	Fatigue from prolonged manual filler rod handling, difficulty in maintaining consistent feeding, meeting welding requirements.	Enhanced control, reduced fatigue, and increased welding efficiency.

Hobbyist Welders & DIY Users	Individuals working on personal welding projects or small-scale manufacturing.	Limited welding experience, difficulty in maintaining proper filler rod positioning.	Improved ease of use and welding accuracy.
Manufacturing & Fabrication Companies	Companies engaged in high-volume welding production.	Need for consistent welding quality, minimizing errors, and improving worker productivity.	Increased efficiency, improved weld uniformity, and reduced welding time.
Welding Schools & Training Centers	Institutions teaching welding techniques.	New welders struggle with rod handling and filler rod movement.	Easier learning process, better ergonomics, and improved training quality.

2.2 Introduction to Product Specification Design

TABLE 2.2: PRODUCT SPECIFICATION

S.No	Part/Component	Need/Requirement	Importance (1-5)
1	Handle	Easy to hold	5
2	Handle	Easy to carry and transport	5
3	Handle	Optimized length for balance	4
4	Handle	Corrosion resistance	4
5	Main Body	Stores multiple types of filler rods	5
6	Main Body	Withstands workshop impacts/handling	4

7	Main Body	Corrosion and rust resistance	5
8	Compartments	Separate sections for different rods	5
9	Compartments	Clear labeling for rod identification	4
10	Lid/Closure	Airtight/moisture-proof seal	5
11	Lid/Closure	Easy to open and close	4
12	Base/Stand	Stable placement on workbench	3
13	Base/Stand	Non-slip or rubberized feet	3
14	Portability	Lightweight for mobile welding	4
15	Material	Non-reactive with filler rod materials	5
16	Cleaning	Easy to clean and maintain	4

2.2.1 Prepare the list of metrics.

TABLE 2.3: LIST OF METRICS

Metric No	Need No	Metric	Importance (1-5)	Units/Standards
1	1, 2, 3	Handle ergonomics (30–40 mm grip diameter,	5	mm

		250 mm length)		
2	4	Handle material (stainless steel 304)	4	ASTM A240
3	5	Main body capacity (20–30 rods)	5	Rods
4	6	Main body impact resistance (1.5 mm wall thickness)	4	mm
5	7	Corrosion resistance (stainless steel 316)	5	ASTM A276
6	8, 9	Compartment organization (4 labeled sections)	5	Sections
7	10	Lid airtightness (silicone gasket, Shore A 50 hardness)	5	Shore A
8	14	Portability (total weight ≤ 2.5 kg)	4	kg
9	15	Material non-reactivity (ISO	5	ISO Standard

		10993 compliance)		
10	16	Surface smoothness (Ra ≤ 0.8 μm)	4	μm (micrometers)

2.2.2 Collect competitive benchmarking information.

TABLE 2.4 BENCHMARKING INFORMATION

Brand/Product Name	**Description**	**Material**	**Handle Design**	**Size**
DIY Custom Spring Feeder	Homebuilt torch accessories using compression springs for semi-auto rod feed.	Mild steel or stainless spring, PVC casing (sometimes).	Standard TIG torch handle with added clip-on spring holder.	Spring: ~200–250mm; Fits torch diameter ~30–35mm.

2.2.3 Set ideal and marginally acceptable target values (Target Spec.)

Defining target specifications is essential for ensuring that a product meets desired performance, usability, and durability benchmarks. By setting both ideal and marginally acceptable target values, we establish a performance range that helps balance quality, feasibility, and cost-efficiency.

• Ideal target values represent the optimal standards—the best possible specifications that deliver maximum efficiency, durability, and user experience.

• Marginally acceptable values define the minimum threshold—ensuring that even if certain parameters fall within an acceptable lower range, the product remains functional and meets user needs.

TABLE 2.5: IDEAL AND MARGINALLY ACCEPTABLE TARGET VALUE

Feature/Specification Parameter	Ideal Value	Marginally Acceptable Value
Minimum filler rod diameter accommodated	≥ 1.0 mm	≤ 2.4 mm
Maximum filler rod diameter accommodated	≤ 3.2 mm	≤ 4.0 mm
Weight of holder (including mechanism)	≤ 200 g	≤ 350 g
Frame material durability	Corrosion resistant (e.g., SS 304, anodized Al)	Mild corrosion resistance (coated aluminum/plastic)
Feeding consistency (per actuation)	5–10 mm controlled feed per lever operation	Up to 15 mm per lever operation
Heat resistance (continuous exposure)	≥ 250°C	≥ 150°C
Mounting compatibility	Fits standard TIG torch handles (universal clamp)	Fits most common TIG torch handles
Assembly/disassembly time	≤ 2 minutes	≤ 5 minutes
Handle/lever ergonomics	Non-slip, contoured grip	Basic grip, minor slippage possible
Product lifespan (with regular use)	≥ 2 years	≥ 6 months
Cleaning/maintenance ease	Tool-free, quick access	Requires simple tools

Rod protection (from contamination)	Airtight/sealed compartments	Dust-resistant compartments
Portability	Lightweight, easily detachable	Moderate weight, detachable

CHAPTER-3

Concept Generation & Concept Selection

3.1 Introduction to Concept Generation:

Concept generation is a foundational phase in the product development process, where creative and systematic approaches are used to develop multiple potential solutions that address the identified customer needs and technical requirements. For the TIG filler rod holder project, this stage is crucial to ensure the final design not only solves the core problems-such as inconsistent filler rod feeding, operator fatigue, and lack of ergonomic support-but also aligns with industry standards and user expectations.

The process begins with a thorough analysis of the welding environment, user pain points, and the functional requirements of the filler rod holder. By exploring a wide range of ideas-ranging from simple mechanical holders to integrated kinematic mechanisms-concept generation allows the design team to consider various technologies, working principles, and forms that could enhance the welding experience. Each concept is evaluated for feasibility, effectiveness, and alignment with the target specifications.

This stage encourages both creativity and practicality, often involving brainstorming sessions, benchmarking existing solutions, and sketching or modeling alternative designs. The goal is to create a diverse set of concepts, from which the most promising can be selected for further development, prototyping, and testing. Ultimately, concept generation

ensures that the final TIG filler rod holder is innovative, ergonomic, and capable of delivering improved precision and efficiency for welders.

3.1.1 Concept Classification Tree (Explore Systematically)

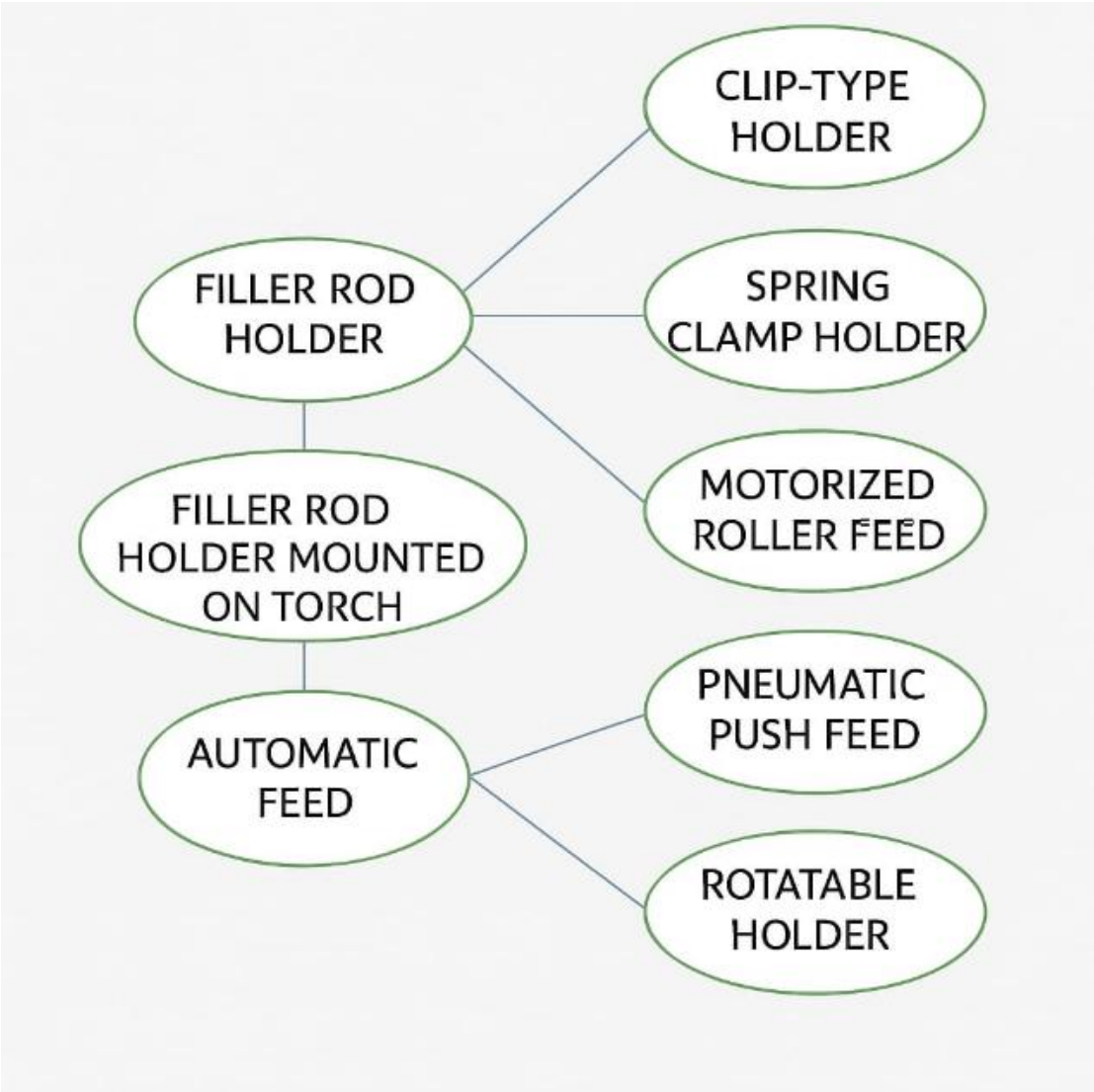

FIGURE 3.1 CONCEPT CLASSIFICATION TREE

TABLE 3.1 CONCEPT GENERATION TABLE

Function/Requirement	**C1: Clip-On Tube**	**C2: Spring Feeder**	**C3: Integrated Handle Slot**	**C4: Flexible Rod Sleeve**	**C5: Pneumatic Cylinder Feeder**
Primary Holding Mechanism	Tube with friction fit	Spring pushing rod	Molded slot in torch	Flexible heatproof sleeve	Pneumatic cylinder pushing rod
Material	Aluminum/ plastic	Steel spring + aluminum	Polymer composite	Silicone/Nomex	Aluminum cylinder + seals
Mounting to Torch	Clip-on or strap	Clamp and screw	Integrated in torch body	Velcro/band	Rigid bracket + hose attachment
Rod Capacity	1–2 rods	1 rod	1 rod	2–3 rods	1 rod (continuous feed)
Weight Impact	Low	Medium	Low	Very low	High
Ease of Assembly	Very easy	Medium	Hard	Very easy	Complex (needs hose & controls)
Durability	Good	Very good	Excellent	Good	Very high
Heat Resistance	Moderate	High	High	High	High

Manufacturing Complexity	Very low	Medium	High	Low	Very high
Cost Estimate	Low	Medium	High	Low	Very high
Advantages	Simple, lightweight	Smooth manual feed	Professional and sleek	Fits any torch	Fully automatic feed, very smooth
Disadvantages	No auto-feed	More complex	Expensive	Can snag	Heavy, needs air supply, complex system

3.1.2 Concept Screening:

Concept screening is a critical step in the product development process, serving as a bridge between the generation of multiple design ideas and the selection of the most promising solution for further development. For our TIG filler rod holder project, concept screening enables us to systematically evaluate and compare various design concepts against predefined criteria such as functionality, ergonomics, manufacturability, cost, and alignment with user needs.

During this stage, each concept-ranging from basic holders to advanced is assessed for its ability to address the core challenges identified in our problem statement: inconsistent filler rod feeding, operator fatigue, lack of ergonomic support, and the need for precision in TIG welding. By employing structured tools like screening matrices and weighted scoring systems, we objectively identify which concepts best fulfill the project objectives and technical requirements

TABLE 3.2 CONCEPT SCREENING

Criteria	C1: Clip-On Tube	C2: Spring Feeder	C3: Integrated Handle Slot	C4: Flexible Rod Sleeve	C5: Pneumatic Cylinder Feeder
Ease of Assembly	+	0	-	+	-
Weight Impact	+	0	+	+	-
Manufacturing Complexity	+	0	-	+	-
Durability	0	+	+	0	+
Cost	+	0	-	+	-
Rod Feed Smoothness	-	+	0	0	+
Heat Resistance	0	+	+	+	+
Portability	+	0	+	+	-
Overall Practicality	+	+	0	+	-
Total (+)	5	6	5	7	4

Total (0)	3	5	2	2	1
Total (-)	1	0	2	0	4
Rank	2	1 (Final Pick)	3	2	4

CHAPTER-4

Product Architecture & Industrial Design

4.1 Introduction to Product Architecture:

The physical elements of a product are typically organized into several major physical building blocks, which we call chunks. Each chunk is then made up of a collection of components that implement the functions of the product. The architecture of a product is the scheme by which the functional elements of the product are arranged into physical chunks and by which the chunks interact.

4.1.1 Cluster of Elements of the Schematic

- **Rod Storage Unit**: Main body with compartments, protective lid system, and material separation mechanisms for different filler rod types.
- **Feed Mechanism Unit**: Lever-actuated kinematic mechanism, spring return system, and incremental feed control components.
- **Mounting System**: Adjustable torch attachment clamp, orientation adjustment mechanism, and stabilizing components.
- **Control Interface**: Ergonomic thumb/finger activation lever, tension adjustment system, and user feedback elements.
- **Heat Protection Unit**: Thermal barriers, heat-resistant materials, and insulation components to protect from welding heat.

4.1.2 A Rough Geometric Layout

- **Physical arrangement of components**: The cylindrical main body positioned parallel to the torch, with the feed mechanism aligned for optimal rod advancement angle and accessibility.
- **Handle design**: Contoured, non-slip grip with strategically positioned activation lever for single-handed operation without compromising torch control.
- **Mounting mechanism**: Adjustable clamp system that secures to standard TIG torch handles while allowing for user-specific positioning and angle preferences.
- **Thermal considerations**: Strategic placement of heat-resistant barriers between the torch head and the rod holder to protect both the mechanism and unused filler material.
- **Portability**: Compact, lightweight design with minimal protrusion to maintain balance and reduce operator fatigue during extended welding sessions.

ROUGH SKETCH:

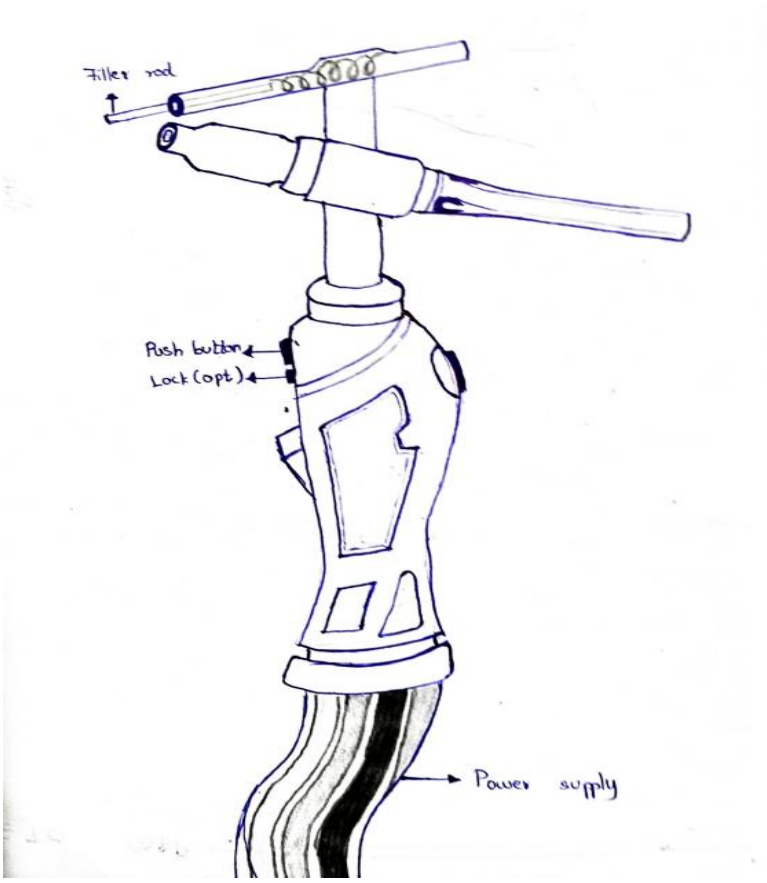

FIGURE 4.1 ROUGH SKETCH

4.2 Introduction to Industrial Design

The Industrial Designers Society of America (IDSA) defines industrial design as "the professional service of creating and developing concepts and specifications that optimize the function, value, and appearance of products and systems for the mutual benefit of both user and manufacturer". For the TIG filler rod holder project, industrial design plays a crucial role in bridging technical functionality with user experience.

Industrial design in this context focuses on creating a solution that not only mechanically feeds the filler rod but does so in a way that feels natural and intuitive to welders. By placing the human at the center of the

design process, we've developed a holder that addresses both physical ergonomics and workflow efficiency. The design considers the entire user experience-from rod storage and protection to comfortable operation during extended welding sessions-creating emotional connections with users through thoughtful integration of form, fit, and function.

This approach ensures that our TIG filler rod holder is not merely a mechanical device but a comprehensive solution that enhances the welding process while providing a competitive advantage through distinctive design and styling that recognizes the unique challenges of the welding environment.

CHAPTER-5

Final Product Specifications & Prototyping

5.1 Introduction to Final Product :

As our team finalizes the choice of concept for the TIG filler rod holder and prepares for subsequent design and development, the specifications are revisited. Specifications that originally were only targets expressed as broad ranges of values are now refined and made more precise.

Finalizing the specifications is difficult because of trade-offs-inverse relationships between two specifications that are inherent in the selected product concept. Trade-offs frequently occur between different technical performance metrics such as weight versus durability and heat resistance versus material cost.

There are also trade-offs between the complexity of the feeding mechanism and ease of manufacturing. These challenges required careful balancing to ensure the final product meets welders' needs while remaining feasible to produce at a reasonable cost.

5.1.1 Develop a cost model of the product.

TABLE 5.1: COST MODEL TABLE

Sub-component	Type	Cost (₹)
Main body/frame (Aluminum alloy)	Material Cost	900
Lever mechanism components (Stainless steel)	Material Cost	600

Heat-resistant guide system (PTFE/ceramic)	Material Cost	400
Spring mechanism/small fittings	Material Cost	300
Torch mounting hardware	Material Cost	200
Total Material Cost		**2,400**
Manufacturing Cost	Machining/fabrication	1,200
Assembly Cost	Labor	350
Admin, packaging, misc.		300
Grand Total Cost		**4,250**

5.1.2 Refine the Specifications (Trade-offs)

TABLE 5.2: SPECIFICATIONS TRADE-OFFS TABLE

Concept	Energy Source / Mechanism	Cost	User Effort	Mechanical Complexity	Effectiveness	Overall Score
1	Manual Spring Mechanism	***	**	***	**	14/20
2	Simple Manual Holder (No mechanism)	**	**	**	**	14/20
3	Ratchet-Based	***	**	**	**	13/20

	Feed System					
4	Thumb Wheel Incremental Feed	**	***	***	**	14/20
5	Spring-Loaded Trigger Mechanism	**	**	*	**	13/20

Legend:

- ***** = Excellent
- **** = Very Good
- *** = Good
- ** = Fair
- *= Poor

The cost model reflects the materials and manufacturing processes required for a quality TIG filler rod holder with an integrated feeding mechanism. The specifications trade-offs table evaluates five potential design concepts, with the manual spring mechanism and thumb wheel designs showing the best overall balance between cost, user effort, mechanical complexity, and effectiveness.

5.2 Introduction to Prototyping (Analytical and or Physical):

Prototyping is a crucial step in the product development process that bridges the gap between conceptual design and full-scale production. It

serves as a tangible representation of a product idea, allowing designers and engineers to test functionality, gather feedback, and refine the design before committing to manufacturing. Prototypes can be categorized into analytical prototypes and physical prototypes, each serving specific purposes in development.

5.2.1 Prototype parts (3D Solid Works):

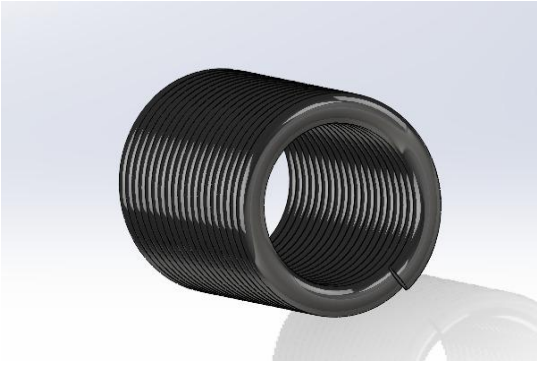

FIGURE 5.1 SPRING

FIGURE 5.2 SPRING ASSEMBLY

In this project, a spring mechanism has been integrated into the design of the filler rod holder for TIG (Tungsten Inert Gas) welding. The use of a spring mechanism is crucial as it provides a controlled and consistent force to feed the filler rod during the welding process. This mechanism allows for smooth operation, enabling the welder to maintain precision without manual effort, thereby reducing fatigue and enhancing overall efficiency.

The spring mechanism functions by storing potential energy when compressed or extended, which is then released to push the filler rod forward as needed. This automatic feeding action ensures that the filler

material is delivered at a steady rate, improving weld quality and consistency. Additionally, it allows for adjustments in tension to accommodate different welding applications or materials. To visualize and test this design effectively, a 3D model has been created using advanced SOLID WORKS software.

The 3D model serves multiple purposes:

Design Validation: It allows for thorough examination of the mechanical interactions within the assembly, ensuring that all components work harmoniously.

Prototyping: The model can be used to create prototypes through 3D printing or other manufacturing methods, facilitating hands-on testing and refinement of the design.

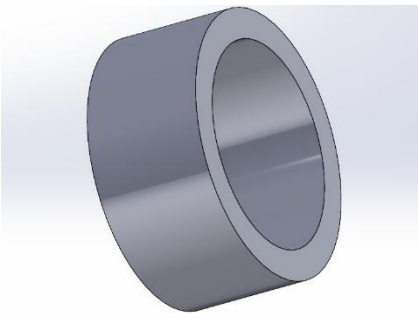

FIGURE 5.3 TORCH ATTACHMENT

FIGURE 5.4 ROD HOLDER

FIGURE 5.5 FILLER ROD HOLDER

The model incorporates features that facilitate easy loading and unloading of filler rods while ensuring stability during welding. By mounting the holder on the torch, it minimizes the need for manual adjustments, thereby reducing operator fatigue and improving overall efficiency. This design not only enhances accessibility but also allows for smoother transitions between different welding tasks without interrupting workflow.

The integration of the filler rod holder with the torch is expected to lead to more consistent weld quality and improved productivity in high-precision applications such as aerospace and automotive industries.

This project represents a significant advancement in TIG welding technology by combining ergonomic design with practical functionality through an innovative 3D model of a filler rod holder mounted on the torch.

CHAPTER-6

CONCLUSIONS:

The growing demand for precision, efficiency, and sustainability in welding has highlighted the need for innovative solutions that address both operator challenges and environmental concerns. Our project, the **TIG Filler Rod Holder with Integrated Spring feed Mechanism**, directly responds to these needs by providing a multifunctional tool that enhances the TIG welding process.

By integrating a controlled, ergonomic filler rod feeding mechanism with the welding torch, our product addresses key issues faced by welders:

- **Inconsistent filler rod feeding**
- **Operator fatigue**
- **Reduced welding precision**
- **Lack of ergonomic support**

The developed holder enables welders to maintain a steady, incremental feed of the filler rod, resulting in improved weld quality and reduced manual errors. The design's compactness, heat resistance, and ease of mounting make it suitable for a wide range of welding environments, from industrial fabrication to repair workshops.

From an environmental perspective, the product supports sustainable welding practices by minimizing material waste and optimizing the use of filler rods. The use of high-quality, corrosion-resistant materials ensures durability and long service life, aligning with the principles of eco-friendly manufacturing and responsible resource use.

The project's outcomes demonstrate that a well-designed filler rod holder not only improves operator comfort and productivity but also contributes to consistent, high-quality welds-critical in industries such as aerospace, automotive, and structural fabrication. Through careful material selection, ergonomic design, and attention to sustainable practices, our solution sets a new benchmark for welding accessories.

Overall, the TIG filler rod holder with spring feed mechanism offers a practical, sustainable, and user-centric approach to advancing welding technology, supporting both industry needs .

REFERENCES:

1. **Product design and development**, sixth edition by Karl T. Ulrich (University of Pennsylvania) and Steven D. Eppinger (Massachusetts Institute of Technology)
2. **Academic Journals & Research Papers**
   a. Articles on TIG welding, filler rod selection, and ergonomic tool design
   b. Studies on sustainable welding and operator health
3. **Industry Standards & Guidelines**
   a. American Welding Society (AWS) specifications for TIG welding
   b. Environmental Protection Agency (EPA) guidelines on sustainable manufacturing
4. **Existing Product Benchmarks**
   a. Manufacturer specifications and industry insights from leading welding equipment suppliers
   b. Technical sheets of similar welding accessories for feature comparison
5. **Government & NGO Reports**
   a. Reports on workplace safety and environmental impact in welding
   b. Non-Governmental Organizations (NGOs) promoting sustainable industrial practices
6. **Online Resources & Scientific Databases**
   a. Websites like ScienceDirect, Springer, and ResearchGate for relevant studies
   b. Technical blogs and whitepapers on innovative welding tools and eco-friendly manufacturing